ZUMALIGHTING

Project _____ Type _____ Qty _____

Company _____ Part # _____

Florence

Overview

The Florence architectural fixture is fabricated from heavy duty cast aluminum and extruded aluminum base with an outdoor polyester powder coat finish. The housing comes standard with 4 convex decorative scrolls spaced 90o apart. Additional options include concave decorative scrolls.. Also available are optional anti-glare frosted lens. The Florence is constructed to meet a variety of classic architectural venues. Designed to install directly on poles or pole tenons and architectural arms that mount on poles or walls. Also available as a wall mount, consult factory. All exterior hardware is corrosion resistant stainless steel, supplied in its natural stainless finish. Color matched hardware is available on request for select finishes; consult factory.

Electrical Components

- Watts : 20w through 160w, Custom watts available, consult factory.
- Voltage: 120v through 277v and High voltage 347V - 480V.

LED

High performance LED CRI: 80. Color temperature ranges from CCT: 2700K - 5000K. Also available in Amber +560nm (AMBR).

Optic

Type II (T2), Type III (T3), Type IV (T4), and Type V (T5)

Lens

- No Lens (NL): for use with Type II through IV (T2, T3, T4, T5) optics.
- Anti-Glare Lens: Anti-Glare Frosted (FDL), Anti-Glare Opal Diffusion (ODL), Anti-Glare Convex Frosted Diffusion (FDLC) for use with Type IV (T4) optics only.

Mounting

- Designed to fit over a 2-3/8" O.D. x 4" L Tenon (SF23804), 3" O.D. x 4" L Tenon (SF304), 3.5" O.D. x 04" L Tenon (SF3504), 4.0" O.D. x 04" L Tenon (or 4.0" O.D. x 4" Long straight pole (SF404).
- Available for use with a custom slip fitter (CSFxxx, e.g.: Specify: CSF3095 = Fits over a 3" O.D. x 9.50" L Tenon, CSF310 = Fits over a 3" O.D. x 10" L Tenon, etc.).
- Wall Mount Version (WM): Wall Mount (WM) version mounts on a wall over a 4" Octagonal through 5" square J-box. Consult factory for specifications.

Finish

Outdoor polyester powder coat, available in our Zuma standard finishes with a four-step pretreat process to ensure optimal adhesion and surface integrity. All standard finishes are provided in a fine texture with a matte sheen; additional textures and sheens are available upon request. Also available in custom RAL and in marine grade finish (MGF), specify.

Controls

- Dimming. 0-10v dimming (D) available.
- Photocell: Mounts to top of fixture (SAM) or side (TAM)

MARINE GRADE FINISH

SKY NIGHT FRIENDLY

BAA / BABA OPTIONAL



Options

- Florence can be made to "Buy American Compliant" (BAA) and "Build America, Buy America Act Compliant" (BABA) (includes BAA)
- SKY = Sky Night Friendly: Downward light only.
- HSS = 180° House Side Shield.
- HSSOP = 180° Houseside Shield (Optics)
- S= Surge Protection: To be field installed in the bottom of the pole.
- Super Durable Marine Grade Finish (MGF) available in standard and custom colors, consult factory.
- FN = Finial
- CS = Concave Scrolls

Certificates & Warranty

- Designed to comply with UL 8750
- Suitable for Wet Locations
- 5-Year Warranty

Technical

- Operating Temperature: -40°F to 95°F (-40°C to 35°C)

Product specifications and design subject to change, at any time, without notice.

Please consult Zuma Lighting for the most current information.

Zuma Lighting LLC | 3850 S. Santa Fe Ave. Los Angeles, CA 90058 | www.zumalighting.com | (310) 975-3126

ZUMALIGHTING

Project _____ Type _____ Qty _____

Company _____ Part # _____

Florence

Example Code: FLO-20W-U-27K-T2-NL-SF23804-BZ8-D-BAA

Item	Wattage	Volts	Color Temp	Optics	Lens	Mounting	Finish	Controls	Options
FLO Florence	**20W**	**U** 120-277v	**27K** 2700K	**T2** Type II	**NL** No Diffusion Lens	**SF23804** Fits over a 2-3/8" O.D. x 4" L Tenon	**BZ8** Zuma Bronze	**D** Dimming 0-10v	**BAA** Buy American Act Compliant
	30W	**HV** 347-480v	**3K** 3000K	**T3** Type III	**FDL** Anti-Glare Frosted Diffusion	**SF304** Fits over a 3.0" O.D. x 4" L Tenon	**BK** GT Black	**PC** Photocell	**BABA** Build America, Buy America Act Compliant
	40W		**35K** 3500K	**T4** Type IV	**ODL** Anti-Glare Opal Diffusion	**SF3504** Fits over a 3-1/2" O.D. x 4" L Tenon	**SL** Iridium Silver		**SKY** Sky Night Friendly
	60W		**4K** 4000K	**T5** Type V	**FDLC** Anti-Glare Convex Frosted Diffusion	**SF404** Fits over a 4.0" O.D. x 4" L Tenon	**WH** Alpine White		**HSS** 180° Houseside Shield
	80W		**45K** 4500K		**ODLC** Anti-Glare Convex Opal Diffusion	**CSFxxx** Custom Slipfitter	**GR2** Midnight Gray		**HSSOP** 180° Houseside Shield (Optics)
	90W		**5K** 5000K			**WM** Wall Mount	**GRN** Moss Green		**MGF** Marine Grade Finish
	120W		**AMBR** 560nm+				**CCxxx**[1] Custom Color		**S** Surge Protection
	150W								**FN** Finial
	160W								**CS** Concave Scroll

1 Custom colors: Available in smooth and textured finishes. Also available in RAL and Sherwin Williams colors, consult factory.

Product specifications and design subject to change, at any time, without notice.

Please consult Zuma Lighting for the most current information.

Zuma Lighting LLC | 3850 S. Santa Fe Ave. Los Angeles, CA 90058 | www.zumalighting.com | (310) 975-3126

ZUMALIGHTING

Project _____ Type _____ Qty _____

Company _____ Part # _____

Florence

Dimensions

Convex Scrolls

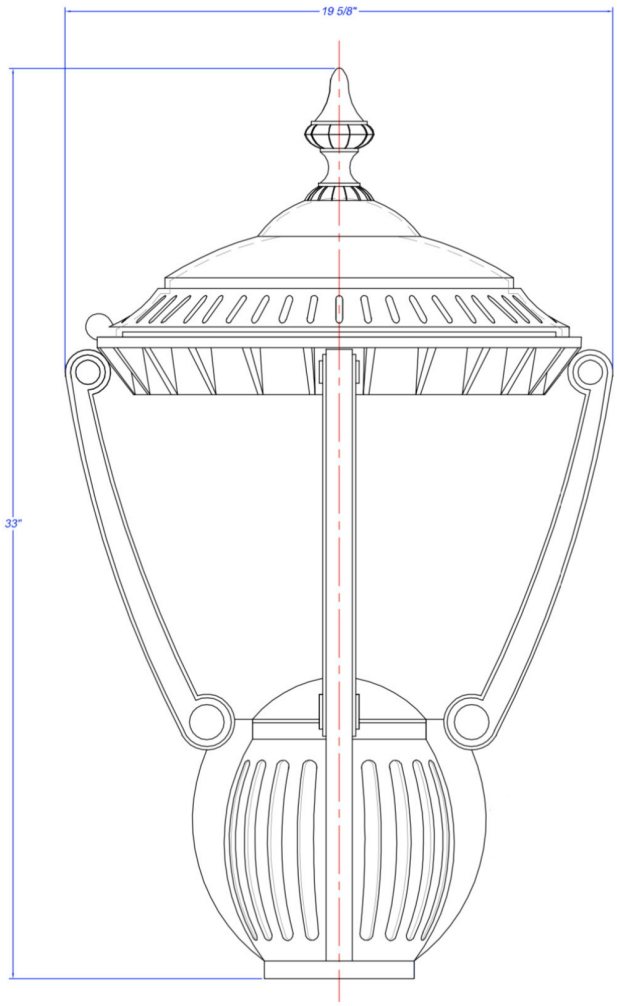

Concave Scrolls

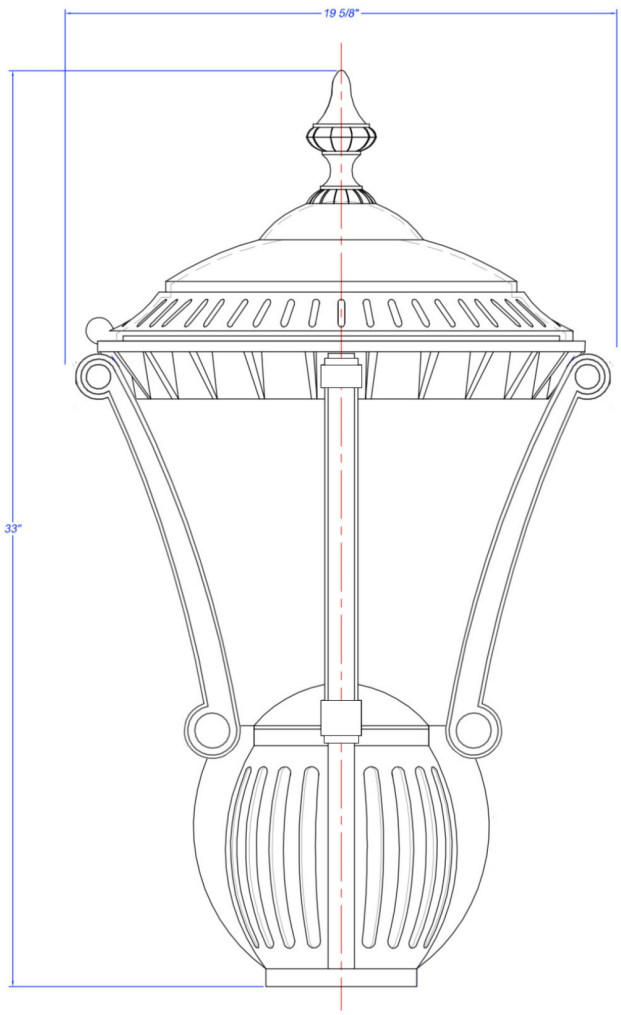

Product specifications and design subject to change, at any time, without notice.

Please consult Zuma Lighting for the most current information.

Zuma Lighting LLC | 3850 S. Santa Fe Ave. Los Angeles, CA 90058 | www.zumalighting.com | (310) 975-3126