ZUMALIGHTING

Project _____ Type _____ Qty _____

Company _____ Part # _____

AT04

Overview

The AT04 Arm is fabricated from heavy duty extruded aluminum alloy with an outdoor polyester powder coat finish. Includes stainless steel hardware. Marine grade finish available. Also available in steel, specify. All exterior hardware is corrosion resistant stainless steel, supplied in its natural stainless finish. Color matched hardware is available on request for select finishes; consult factory.

Arm Sizes

Three (3) standard sizes for fixture sizes from, 16" through 30".

- Small (12" H x 18" W): For fixtures 14" Dia. thru 18" Dia.
- Medium (12" H x 24" W): For fixtures 18" Dia. thru 24" Dia.
- Large: (12" x 26" W): For fixtures 20" Dia. thru 30" Dia.
- Custom sizes available, specificy.

Arm Configuration

Come in Single, Double, Triple and Quad Arm options.

Mounting (To Pole)

AT04 installs on poles (open or tenon), and/or post tops.

- 3" O.D. x 4" Long (SF304)
- 3-1/2" O.D. x 4" Long (SF304)
- 4" O.D. x 4" Long (SF404)
- Custom Slip Fitters available, specify.

Arm Mounting (To Fixture)

AT04 comes with standard 4" long Tenons for fixture.

- 1-1/2" Sch. 40 x 3" Long (TA2)
- 2" Sch. 40 x 3" Long (TA3)

Arm Cap

- Arms are fitted with a UV stable, weather resistant, PVT plastic flat cap (-FC) with an internal securing spring, painted to match the arm.
- Custom Dome Capes (-DC) or Spherical Ball Caps (-SC) are available, specify.

Finish

Outdoor polyester powder coat, available in our Zuma standard finishes with a four-step pretreat process to ensure optimal adhesion and surface integrity. All standard finishes are provided in a fine texture with a matte sheen; additional textures and sheens are available upon request. Also available in custom RAL and in marine grade finish (MGF), specify.

Options

- Buy American Act Compliant (BAA)
- Build America, Buy America Act Compliant (BABA. Includes BAA)
- Marine Grade Finish (MGF)

MARINE GRADE FINISH

BAA / BABA OPTIONAL



Certificates & Warranty

- Designed to comply with UL 8750
- Suitable for Wet Locations
- 5-Year Warranty

Technical

- Operating Temperature: -40°F to 95°F (-40°C to 35°C)

Product specifications and design subject to change, at any time, without notice.

Please consult Zuma Lighting for the most current information.

Zuma Lighting LLC | 3850 S. Santa Fe Ave. Los Angeles, CA 90058 | www.zumalighting.com | (310) 975-3126

ZUMALIGHTING

Project _____ Type _____ Qty _____

Company _____ Part # _____

AT04

Example Code: AT04-A-1218-S1-SF304-TA2-FC-BZ8-BAA

Item	Material	Size	Arm-Config	Mounting-To-Pole	Arm-Mounting-To-Fixture	Caps	Finish	Options
AT04 AT04 Arm	**A** Aluminum, std.	**1218** 12"H x 18"W Ctr to Ctr	**S1** Single Arm	**SF304** Fits over a 3.0" O.D. x 4" L Tenon	**TA2** Top Arm Mount	**FC** Flat Cap, Std.	**BZ8** Zuma Bronze	**BAA** Buy American Act Compliant
	S Steel	**1224** 12"H x 24"W Ctr to Ctr	**D90** Double arms at 90°	**SF3504** Fits over a 3-1/2" O.D. x 4" L Tenon	**TA3** Top Arm Mount	**DC** Dome Cap	**BK** GT Black	**BABA** Build America, Buy America Act Compliant
		1226 12"H x 26"W Ctr to Ctr	**D180** Double arms at 90°	**SF404** Fits over a 4" O.D. x 4" L Tenon		**SC** Spherical Ball Cap	**SL** Iridium Silver	**MGF** Marine Grade Finish
		CXXX Cxxx (Custom Arm Size)	**T90** Triple 3 Arms at 90°	**CSFXXX** CSFxxx (Custom Slip Fitter)			**WH** Alpine White	
			T120 Triple 3 Arms at 120°				**GR2** Midnight Gray	
			Q90 Quad 4 Arms at 90°				**GRN** Moss Green	
							CCxxx[1] Custom Color	

1 Custom colors: Available in smooth and textured finishes. Also available in RAL and Sherwin Williams colors, consult factory.

Product specifications and design subject to change, at any time, without notice.

Please consult Zuma Lighting for the most current information.

Zuma Lighting LLC | 3850 S. Santa Fe Ave. Los Angeles, CA 90058 | www.zumalighting.com | (310) 975-3126

ZUMALIGHTING

Project _____ Type _____ Qty _____

Company _____ Part # _____

AT04

Dimensions

Arm and Fixture Spacing*

AT04 Single Arm (S1) and Double Arm (D180) with Washburn and Premier fixtures (18" through 30" Dia.) shown for clarity.

* Dimension are nominal. Actual fixture dimensions may vary.

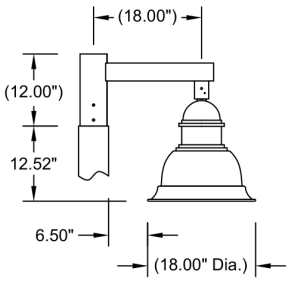

AT04 S1-1218
Single Arm, 12" H x 18" Ctr to Ctr
with Washburn 18" (WAS-18/WASGG-18)
on a 5" Dia. Pole.

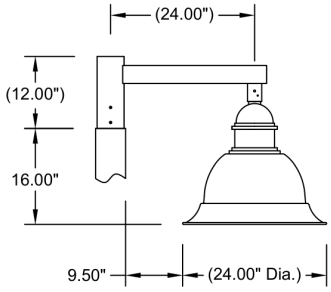

AT04 S1-1224
Single Arm, 12" H x 24" Ctr to Ctr
with Washburn 24" (WAS-24/WASGG-24)
on a 5" Dia. Pole.

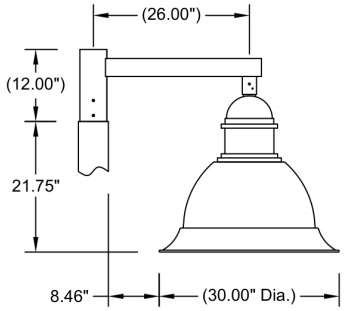

AT04 S1-1226
Single Arm, 12" H x 26" Ctr to Ctr
with Washburn 30" (WAS-30/WASGG-30)
on a 5" Dia. Pole.

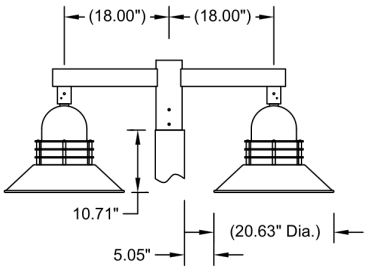

AT04 S1-1218
Single Arm, 12" H x 18" Ctr to Ctr
with Premier 20" (PRM-20/PRMGG-20)
on a 5" Dia. Pole.

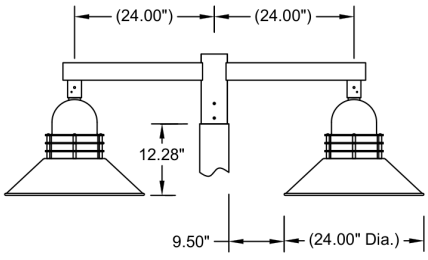

AT04 S1-1224
Single Arm, 12" H x 24" Ctr to Ctr
with Premier 24" (PRM-24/PRMGG-24)
on a 5" Dia. Pole.

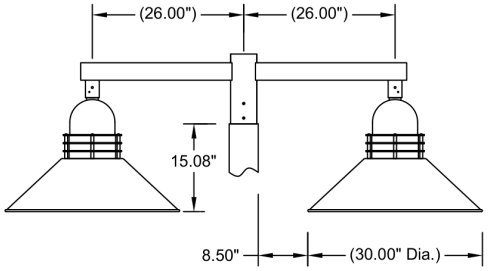

AT04 S1-1226
Single Arm, 12" H x 26" Ctr to Ctr
with Premier 30" (PRM-30/PRMGG-30)
on a 5" Dia. Pole.

Product specifications and design subject to change, at any time, without notice.

Please consult Zuma Lighting for the most current information.

Zuma Lighting LLC | 3850 S. Santa Fe Ave. Los Angeles, CA 90058 | www.zumalighting.com | (310) 975-3126