ZUMALIGHTING

Project _____ Type _____ Qty _____

Company _____ Part # _____

Auburn Bollard

Overview

The Auburn Bollard is constructed from durable aluminum alloy and finished with a weather-resistant polyester powder coat. Designed to illuminate pathways, it also enhances safety by clearly defining property boundaries for drivers. All exterior hardware is corrosion resistant stainless steel, supplied in its natural stainless finish. Color matched hardware is available on request for select finishes; consult factory.

Size

Available in standard 6" and 8" square size with standard heights (30", 36", 42" and 48"). Custom size and heights available.

Electrical

- Watts: 7, 10, 12, 15 and 20W
- Voltage: 120v through 277v (U). 347-480v (HV).

LED

High performance LED CRI: 80. Color temperature ranges from CCT: 2700K - 5000K. Also available in Amber LED array.

Optics

Available Optics: 180° Optics (T180), 360° Optics (T360).

Lens

Acrylic Lens: Frosted Acrylic (FA), and Opal White Acrylic (OA)

Mounting

Heavy duty internal baseplate (IBP) installs on the ground with anchor bolts (four anchor bolts, nuts and washers). External base plate (ESM) also available, consult factory.

Finish

Outdoor polyester powder coat, available in our Zuma standard finishes with a four-step pretreat process to ensure optimal adhesion and surface integrity. All standard finishes are provided in a fine texture with a matte sheen; additional textures and sheens are available upon request. Also available in custom RAL and in marine grade finish (MGF), specify.

Controls

- Dimming. 0-10v dimming (D) available.

Options

- Bollard can be made to "Buy American Compliant" (BAA)[1] and "Build America, Buy America Act Compliant" (BABA)[1] (includes BAA)
- Emergency Battery Backup (EMB)
- Marine grade finish (MGF) available in standard and custom colors, consult factory.
- Perforated Screen 180° (PS180)
- Perforated Screen 360° (PS360)
- Surge Protection (S): Field installed in the bottom of the bollard.
- Vandal Resistance Hardware (VRH): Optional vandal resistant stainless steel hardware installed for added security. [1]

MARINE GRADE FINISH

BAA / BABA OPTIONAL

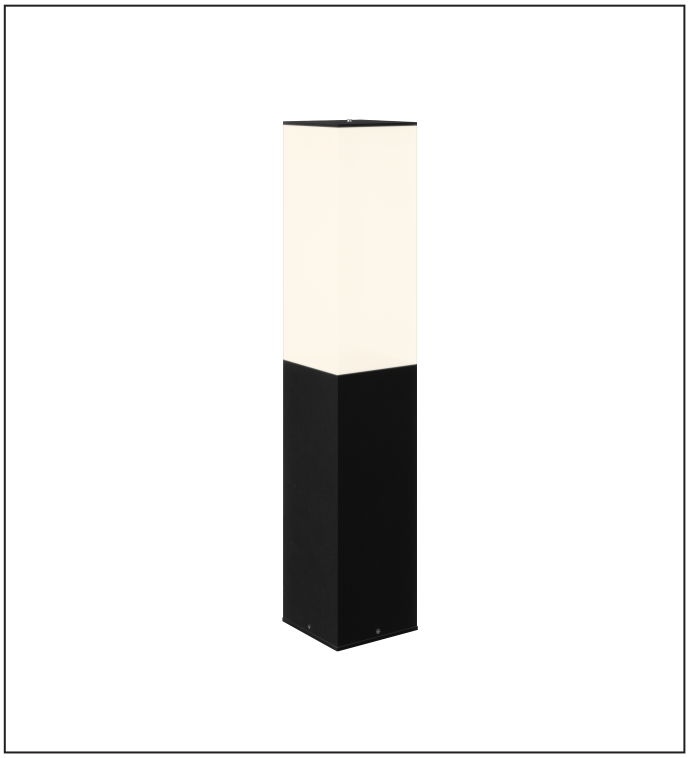

Certificates & Warranty

- Designed to comply with UL 8750
- Suitable for Wet Locations
- 5-Year Warranty

Technical

- Operating Temperature: -40°F to 95°F (-40°C to 35°C)

Product specifications and design subject to change, at any time, without notice.

Please consult Zuma Lighting for the most current information.

Zuma Lighting LLC | 3850 S. Santa Fe Ave. Los Angeles, CA 90058 | www.zumalighting.com | (310) 975-3126

ZUMALIGHTING

Project _____ Type _____ Qty _____

Company _____ Part # _____

Auburn Bollard

Example Code: AUB-B-0830-7W-U-27K-T180-FA-IBP-BZ8-D-BAA

Item	Size	Wattage	Volts	Color Temp	Optics	Lens	Mounting	Finish	Controls	Options
AUB-B Auburn Bollard	**0830** 8"SQ x 30" H	**7W**	**U** 120-277v	**27K** 2700K	**T180** 180° Optics	**FA** Frosted Acrylic	**IBP** Internal Baseplate	**BZ8** Zuma Bronze	**D** Dimming 0-10v	**BAA** Buy American Act Compliant
	0836 8"SQ x 36" H	**10W**	**HV** 347-480v	**3K** 3000K	**T360** 360° Optics	**OA** Opal White Acrylic	**ESM** External Surface Mount	**BK** GT Black		**BABA** Build America, Buy America Act Compliant
	0842 8"SQ x 42" H	**12W**		**35K** 3500K				**SL** Iridium Silver		**EMB** Emergency Battery Backup
	0848 8"SQ x 48" H	**15W**		**4K** 4000K				**WH** Alpine White		**MGF** Marine Grade Finish
	CSxxx Custom Size	**20W**		**45K** 4500K				**GR2** Midnight Gray		**PS180** Perforated Screen 180°
				5K 5000K				**GRN** Moss Green		**PS360** Perforated Screen 360°
								CCxxx[1] Custom Color		**S** Surge Protection
										VRH Vandal Resistant Hardware

1 Custom colors: Available in smooth and textured finishes. Also available in RAL and Sherwin Williams colors, consult factory.

Product specifications and design subject to change, at any time, without notice.

Please consult Zuma Lighting for the most current information.

Zuma Lighting LLC | 3850 S. Santa Fe Ave. Los Angeles, CA 90058 | www.zumalighting.com | (310) 975-3126

ZUMALIGHTING

Project _____ Type _____ Qty _____

Company _____ Part # _____

Auburn Bollard

Dimensions

Dimensions

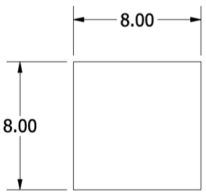

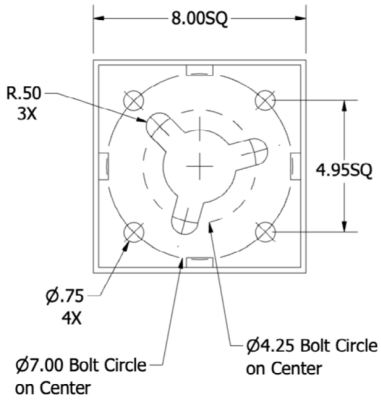

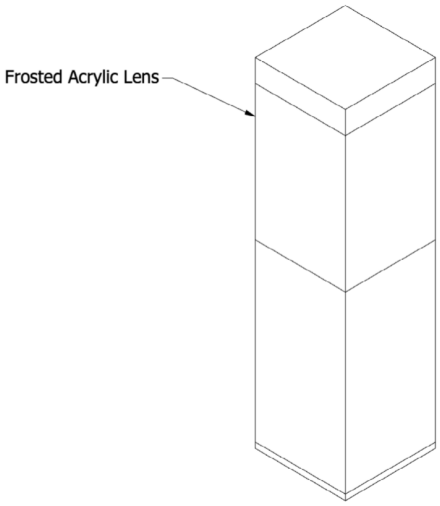

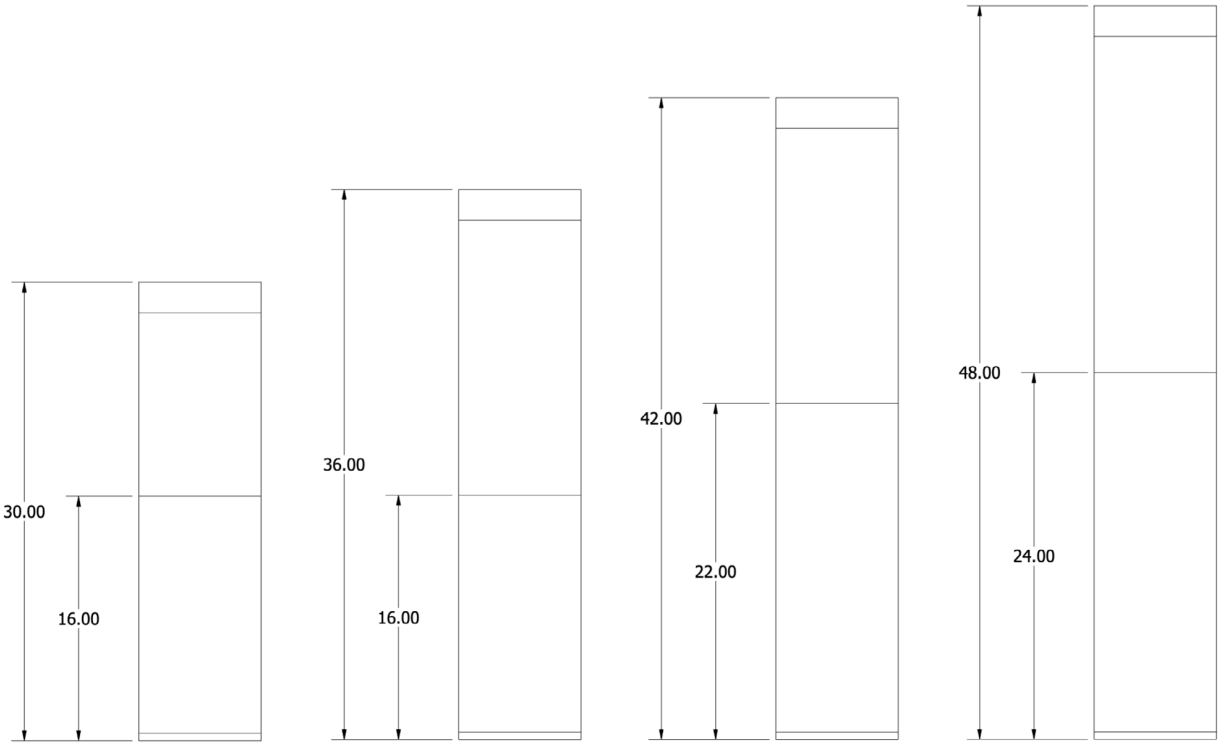

Product specifications and design subject to change, at any time, without notice.

Please consult Zuma Lighting for the most current information.

Zuma Lighting LLC | 3850 S. Santa Fe Ave. Los Angeles, CA 90058 | www.zumalighting.com | (310) 975-3126