ZUMALIGHTING

Project _____ Type _____ Qty _____

Company _____ Part # _____

Manchester

Overview

The Manchester architectural fixture is fabricated from heavy duty cast aluminum and extruded aluminum base with an outdoor polyester powder coat finish. Available with an optional anti-glare frosted lens. The Manchester is constructed to meet a variety of classic architectural venues. Designed to install directly on poles or pole tenons and architectural arms that mount on poles or walls. Also available as a wall mount, consult factory. All exterior hardware is corrosion resistant stainless steel, supplied in its natural stainless finish. Color matched hardware is available on request for select finishes; consult factory.

Electrical Components

- Watts : 20w through 160w, Custom watts available, consult factory.
- Voltage: 120v through 277v and High voltage 347V - 480V.

LED

High performance LED CRI: 80. Color temperature ranges from CCT: 2700K - 5000K. Also available in Amber +560nm (AMBR).

Optic

Type II (T2), Type III (T3), Type IV (T4), and Type V (T5)

Lens

- Frosted Acrylic (FA)
- Opal White Acrylic (OA)
- Clear Acrylic (CA)

Mounting

- Designed to fit over a 2-3/8" O.D. x 4" L Tenon (SF23804), 3" O.D. x 4" L Tenon (SF304), 3.5" O.D. x 04" L Tenon (SF3504), 4.0" O.D. x 04" L Tenon (or 4.0" O.D. x 4" Long straight pole (SF404).
- Available for use with a custom slip fitter (CSFxxx, e.g.: Specify: CSF3095 = Fits over a 3" O.D. x 9.50" L Tenon, CSF310 = Fits over a 3" O.D. x 10" L Tenon, etc.).
- Wall Mount Version (WM): Wall Mount (WM) version mounts on a wall over a 4" Octagonal through 5" square J-box. Consult factory for specifications.

Finish

Outdoor polyester powder coat, available in our Zuma standard finishes with a four-step pretreat process to ensure optimal adhesion and surface integrity. All standard finishes are provided in a fine texture with a matte sheen; additional textures and sheens are available upon request. Also available in custom RAL and in marine grade finish (MGF), specify.

Controls

- Dimming. 0-10v dimming (D) available.
- Photocell: Mounts to top of fixture (SAM) or side (TAM)

MARINE GRADE FINISH

SKY NIGHT FRIENDLY

BAA / BABA OPTIONAL



Options

- Manchester can be made to "Buy American Compliant" (BAA) and "Build America, Buy America Act Compliant" (BABA) (includes BAA)
- SKY = Sky Night Friendly: Downward light only.
- HSS = 180° House Side Shield.
- HSSOP = 180° Houseside Shield (Optics)
- S= Surge Protection: To be field installed in the bottom of the pole.
- Super Durable Marine Grade Finish (MGF) available in standard and custom colors, consult factory.

Certificates & Warranty

- Designed to comply with UL 8750
- Suitable for Wet Locations
- 5-Year Warranty

Technical

- Operating Temperature: -40°F to 95°F (-40°C to 35°C)

Product specifications and design subject to change, at any time, without notice.

Please consult Zuma Lighting for the most current information.

Zuma Lighting LLC | 3850 S. Santa Fe Ave. Los Angeles, CA 90058 | www.zumalighting.com | (310) 975-3126

ZUMALIGHTING

Project _____ Type _____ Qty _____

Company _____ Part # _____

Manchester

Example Code: MCH-20W-U-27K-T2-FA-SF23804-BZ8-D-BAA

Item	Wattage	Volts	Color Temp	Optics	Lens	Mounting	Finish	Controls	Options
MCH Manchester	**20W**	**U** 120-277v	**27K** 2700K	**T2** Type II	**FA** Frosted Acrylic	**SF23804** Fits over a 2-3/8" O.D. x 4" L Tenon	**BZ8** Zuma Bronze	**D** Dimming 0-10v	**BAA** Buy American Act Compliant
	30W	**HV** 347-480v	**3K** 3000K	**T3** Type III	**OA** Opal White Acrylic	**SF304** Fits over a 3.0" O.D. x 4" L Tenon	**BK** GT Black	**PC** Photocell	**BABA** Build America, Buy America Act Compliant
	40W		**35K** 3500K	**T4** Type IV	**CA** Clear Acrylic	**SF3504** Fits over a 3-1/2" O.D. x 4" L Tenon	**SL** Iridium Silver		**SKY** Sky Night Friendly
	60W		**4K** 4000K	**T5** Type V	**NL** No Diffusion Lens	**SF404** Fits over a 4.0" O.D. x 4" L Tenon	**WH** Alpine White		**HSS** 180° Houseside Shield
	80W		**45K** 4500K			**CSFxxx** Custom Slipfitter	**GR2** Midnight Gray		**HSSOP** 180° Houseside Shield (Optics)
	90W		**5K** 5000K			**WM** Wall Mount	**GRN** Moss Green		**MGF** Marine Grade Finish
	120W		**AMBR** 560nm+				**CCxxx**[1] Custom Color		**S** Surge Protection
	150W								
	160W								

1 Custom colors: Available in smooth and textured finishes. Also available in RAL and Sherwin Williams colors, consult factory.

Product specifications and design subject to change, at any time, without notice.

Please consult Zuma Lighting for the most current information.

Zuma Lighting LLC | 3850 S. Santa Fe Ave. Los Angeles, CA 90058 | www.zumalighting.com | (310) 975-3126

ZUMALIGHTING

Project _____ Type _____ Qty _____

Company _____ Part # _____

Manchester

Dimensions

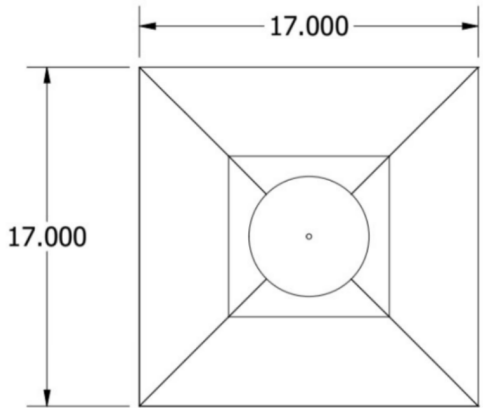

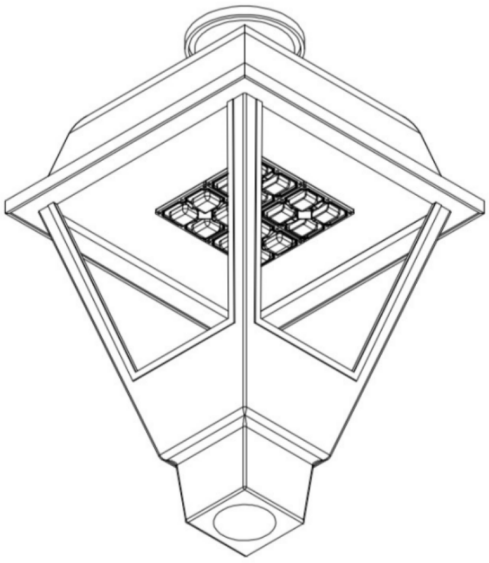

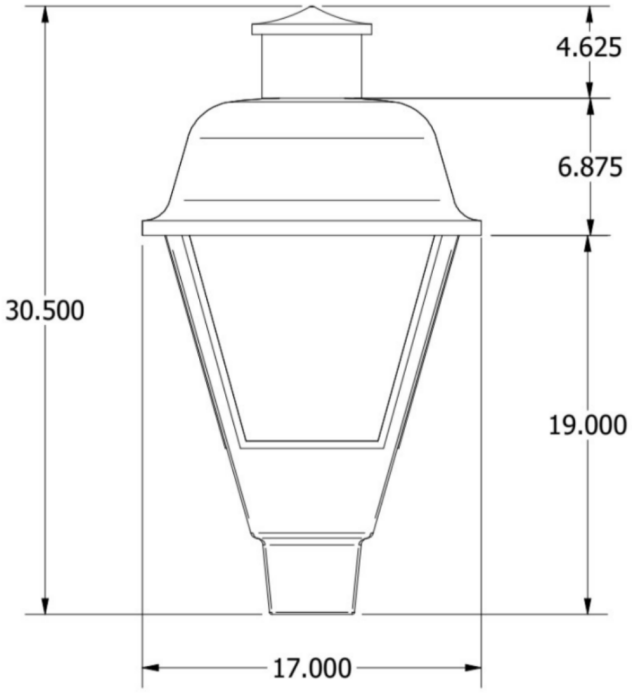

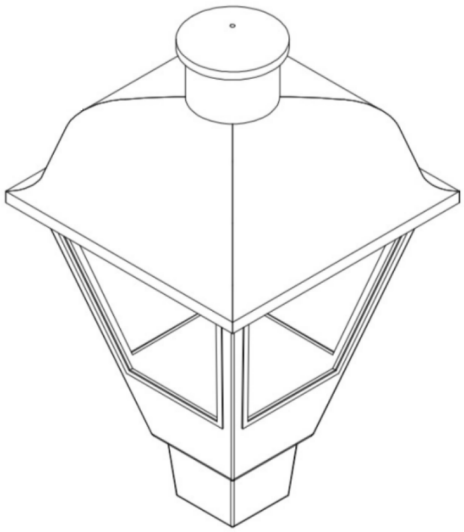

Product specifications and design subject to change, at any time, without notice.

Please consult Zuma Lighting for the most current information.

Zuma Lighting LLC | 3850 S. Santa Fe Ave. Los Angeles, CA 90058 | www.zumalighting.com | (310) 975-3126