ZUMALIGHTING

Project _____ Type _____ Qty _____

Company _____ Part # _____

Stealth Bollard

Overview

The Stealth Bollard is constructed from durable aluminum alloy and finished with a weather-resistant polyester powder coat. Designed to illuminate pathways, it also enhances safety by clearly defining property boundaries for drivers. All exterior hardware is corrosion resistant stainless steel, supplied in its natural stainless finish. Color matched hardware is available on request for select finishes; consult factory.

Size

Available in standard 6" square size with standard heights (36"and 42"). Custom sizes available.

Electrical

- Watts: 7, 10, 12, 15, 20, 25 and 30W
- Voltage: 120v through 277v (U). 347-480v (HV).

LED

High performance LED CRI: 80. Color temperature ranges from CCT: 2700K - 5000K. Also available in Amber LED array.

Optics

Available Optics: Type II (T2), Type III (T3), Type IV (T4), and Type V (T5).

Mounting

Heavy duty internal baseplate (IBP) installs on the ground with anchor bolts (four anchor bolts, nuts and washers). External base plate (ESM) also available, consult factory.

Finish

Outdoor polyester powder coat, available in our Zuma standard finishes with a four-step pretreat process to ensure optimal adhesion and surface integrity. All standard finishes are provided in a fine texture with a matte sheen; additional textures and sheens are available upon request. Also available in custom RAL and in marine grade finish (MGF), specify.

Controls

- Dimming. 0-10v dimming (D) available.
- Photocell: Small button style photocell available in 120v-277v on side of fixture (PC).
- Motion Sensor (M)

Options

- Bollard can be made to "Buy American Compliant" (BAA)[1] and "Build America, Buy America Act Compliant" (BABA)[1] (includes BAA)
- Emergency Battery Backup (EMB)
- Sky Night Friendly (SKY)
- 180° Houseside Shield on Optics (HSSOP)
- Surge Protection (S): Field installed in the bottom of the bollard.
- Marine grade finish (MGF) available in standard and custom colors, consult factory.
- Vandal Resistance Hardware (VRH): Optional vandal resistant stainless steel hardware installed for added security. [1]

MARINE GRADE FINISH

SKY NIGHT FRIENDLY

BAA / BABA OPTIONAL



Certificates & Warranty

- Designed to comply with UL 8750
- Suitable for Wet Locations
- 5-Year Warranty

Technical

- Operating Temperature: -40°F to 95°F (-40°C to 35°C)

Product specifications and design subject to change, at any time, without notice.

Please consult Zuma Lighting for the most current information.

Zuma Lighting LLC | 3850 S. Santa Fe Ave. Los Angeles, CA 90058 | www.zumalighting.com | (310) 975-3126

ZUMALIGHTING

Project _____ Type _____ Qty _____

Company _____ Part # _____

Stealth Bollard

Example Code: STH-B-0636-7W-U-27K-T2-IBP-BZ8-D-BAA

Item	Size	Wattage	Volts	Color Temp	Optics	Mounting	Finish	Controls	Options
STH-B Stealth Bollard	**0636** 6" Sq x 36"H	**7W** 805	**U** 120-277v	**27K** 2700K	**T2** Type II	**IBP** Internal Baseplate	**BZ8** Zuma Bronze	**D** Dimming 0-10v	**BAA** Buy American Act Compliant
	0642 6" Sq x 42"H	**10W** 1150	**HV** 347-480v	**3K** 3000K	**T3** Type III	**ESM** External Surface Mount	**BK** GT Black	**PC** Photocell	**BABA** Build America, Buy America Act Compliant
	CSXXX Custom Size	**12W** 1380		**35K** 3500K	**T4** Type IV		**SL** Iridium Silver	**M** Motion Sensor	**EMB** Emergency Battery Backup
		15W 1725		**4K** 4000K	**T5** Type V		**WH** Alpine White		**SKY** Sky Night Friendly
		20W 2300		**45K** 4500K			**GR2** Midnight Gray		**HSSOP** 180° Houseside Shield (Optics)
		25W 2875		**5K** 5000K			**GRN** Moss Green		**S** Surge Protection
		30W 3450		**AMBR** 560nm+			**CCxxx**[1] Custom Color		**MGF** Marine Grade Finish
									VRH Vandal Resistant Hardware

1 Custom colors: Available in smooth and textured finishes. Also available in RAL and Sherwin Williams colors, consult factory.

Product specifications and design subject to change, at any time, without notice.

Please consult Zuma Lighting for the most current information.

Zuma Lighting LLC | 3850 S. Santa Fe Ave. Los Angeles, CA 90058 | www.zumalighting.com | (310) 975-3126

ZUMALIGHTING

Project _____ Type _____ Qty _____

Company _____ Part # _____

Stealth Bollard

Dimensions

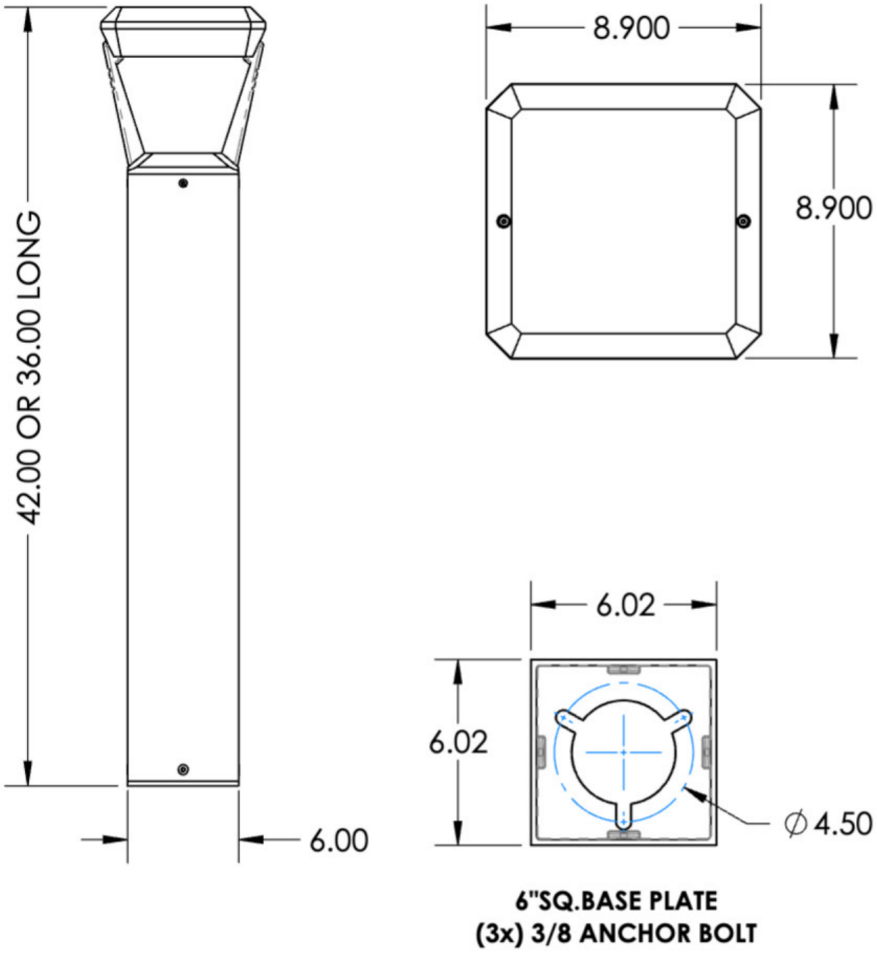

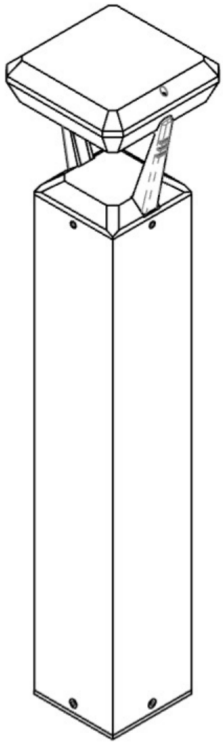

P/N: STH-42
MAX WATTAGE: 40W
LUMENS: 5700lms

Product specifications and design subject to change, at any time, without notice.

Please consult Zuma Lighting for the most current information.

Zuma Lighting LLC | 3850 S. Santa Fe Ave. Los Angeles, CA 90058 | www.zumalighting.com | (310) 975-3126