ZUMALIGHTING

Project _____ Type _____ Qty _____

Company _____ Part # _____

Avatanka

Overview

The Avatanka architectural fixture features a cast and extruded aluminum housing with a durable spun aluminum shade, finished in a weather-resistant polyester powder coat. Designed to meet diverse architectural needs, it is available with a single or double shade, and optional two or four vertical bar configurations. All exterior hardware is corrosion resistant stainless steel, supplied in its natural stainless finish. Color matched hardware is available on request for select finishes; consult factory.

Electrical

Watts : 12w through 80w, Custom watts available, consult factory.

Voltage

120v through 277v and High voltage 347V - 480V.

LED

High performance LED CRI: 80. Color temperature ranges from CCT: 2700K - 5000K. Also available in Amber +560nm (AMBR).

Optic

Type III (T3) and Type V (T5)

Lens

No Diffusion Lens (NL), Frosted Lens (FL), Opal White Lens (OL), or Clear Lens (CL)

Mounting

- Designed to fit over a 2-3/8" O.D. Tenon (SF238) or 3" O.D. Tenon (SF300).
- Wall Mount Version (WM): Wall Mount (WM) version mounts on a wall over a 4" Octagonal through 5" square J-box. Consult factory for specifications.

Finish

Outdoor polyester powder coat, available in our Zuma standard finishes with a four-step pretreat process to ensure optimal adhesion and surface integrity. All standard finishes are provided in a fine texture with a matte sheen; additional textures and sheens are available upon request. Also available in custom RAL and in marine grade finish (MGF), specify.

Controls

- Dimming. 0-10v dimming (D) available.
- Photocell: Mounts to fixture top (for SAM1) or side (for TAM1) mounting.

MARINE GRADE FINISH

SKY NIGHT FRIENDLY

BAA / BABA OPTIONAL



Options

- Bollard can be made to "Buy American Compliant" (BAA)[1] and "Build America, Buy America Act Compliant" (BABA)[1] (includes BAA)
- Sky Night Friendly (SKY)
- 180° Houseside Shield (HSS)
- Surge Protection (S)
- Marine grade finish (MGF) available in standard and custom colors, consult factory.
- Double Shade (2S)
- 4 Vertial Bars (4VB) [1]

Certificates & Warranty

- Designed to comply with UL 8750
- Suitable for Wet Locations
- 5-Year Warranty

Technical

- Operating Temperature: -40°F to 95°F (-40°C to 35°C)

Product specifications and design subject to change, at any time, without notice.

Please consult Zuma Lighting for the most current information.

Zuma Lighting LLC | 3850 S. Santa Fe Ave. Los Angeles, CA 90058 | www.zumalighting.com | (310) 975-3126

ZUMALIGHTING

Project _____ Type _____ Qty _____

Company _____ Part # _____

Avatanka

Example Code: AVA-12W-U-27K-T3-NL-SF238-BZ8-D-BAA

Item	Wattage	Volts	Color Temp	Optics	Lens	Mounting	Finish	Controls	Options
AVA Avatanka	**12W**	**U** 120-277v	**27K** 2700K	**T3** Type III	**NL** No Diffusion Lens	**SF238** Fits over 2-3/8" OD Tenon	**BZ8** Zuma Bronze	**D** Dimming 0-10v	**BAA** Buy American Act Compliant
	15W	**HV** 347-480v	**3K** 3000K	**T5** Type V	**FL** Frosted Lens	**SF300** Fits over 3" OD Tenon	**BK** GT Black	**PC** Photocell	**BABA** Build America, Buy America Act Compliant
	20W		**35K** 3500K		**OL** Opal White Lens	**WM** Wall Mount	**SL** Iridium Silver	**M** Motion Sensor	**HSS** 180° Houseside Shield
	30W		**4K** 4000K		**CL** Clear Lens		**WH** Alpine White		**SKY** Sky Night Friendly
	40W		**45K** 4500K				**GR2** Midnight Gray		**S** Surge Protection
	50W		**5K** 5000K				**GRN** Moss Green		**MGF** Marine Grade Finish
	60W		**AMBR** 560nm+				**CCxxx**[1] Custom Color		**2S** Double Shade
	80W								**4VB** 4 Vertical Bars

1 Custom colors: Available in smooth and textured finishes. Also available in RAL and Sherwin Williams colors, consult factory.

Product specifications and design subject to change, at any time, without notice.

Please consult Zuma Lighting for the most current information.

Zuma Lighting LLC | 3850 S. Santa Fe Ave. Los Angeles, CA 90058 | www.zumalighting.com | (310) 975-3126

ZUMALIGHTING

Project _____ Type _____ Qty _____

Company _____ Part # _____

Avatanka

Dimensions

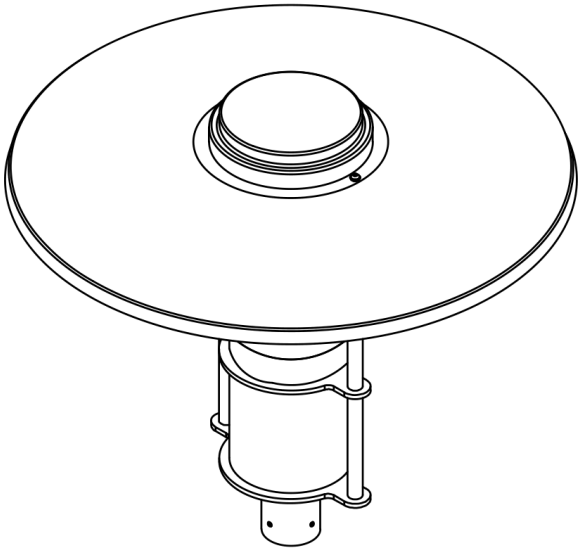

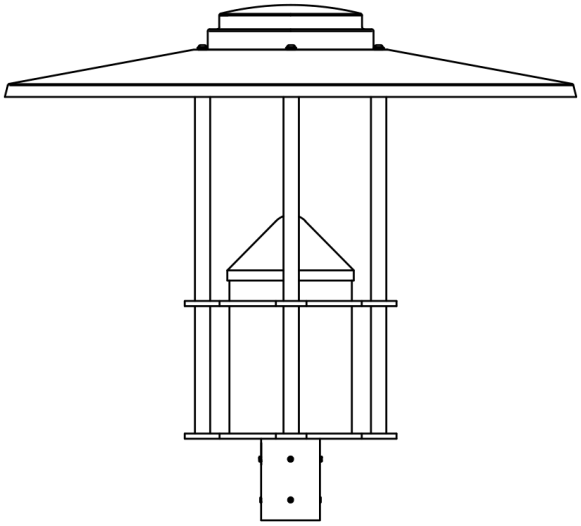

1 Shade , No Lens,
4 Vert Bars

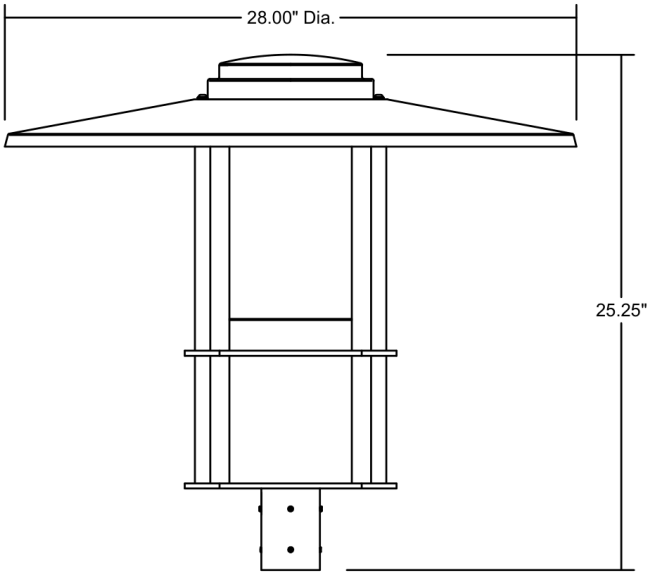

1 shade , White
Opal Acrylic Lens

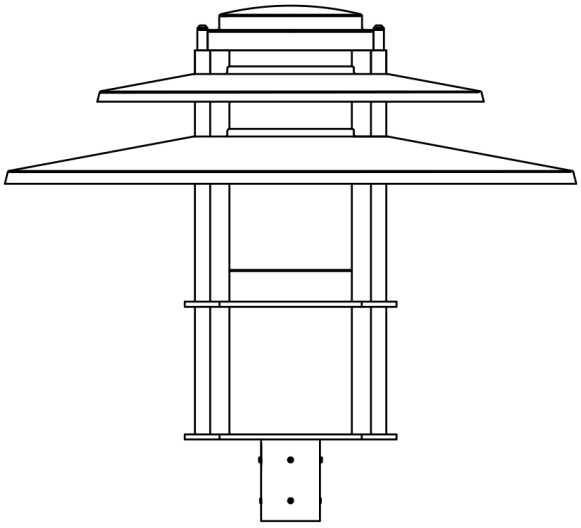

Double Shade,
White Opal Acrylic
Lens

Product specifications and design subject to change, at any time, without notice.

Please consult Zuma Lighting for the most current information.

Zuma Lighting LLC | 3850 S. Santa Fe Ave. Los Angeles, CA 90058 | www.zumalighting.com | (310) 975-3126