ZUMALIGHTING

Project _____ Type _____ Qty _____

Company _____ Part # _____

Tacoma Bollard

Overview

The Tacoma bollard features aluminum extruded square tube with 4 vertical aluminum square bar accents laser cut and milled for maximum strength. Bollard head isconstructed from a combination of cast and fabricated aluminum. Designed to illuminate pathways, it also enhances safety by clearly defining property boundaries for drivers. All exterior hardware is corrosion resistant stainless steel, supplied in its natural stainless finish. Color matched hardware is available on request for select finishes; consult factory.

Size

Available in standard 6" and 8" square size with standard heights (30", 36", 42" and 48"). Custom size and heights available.

Electrical

- Watts: 10, 12, 15, 20 and 30W
- Voltage: 120v through 277v (U). 347-480v (HV).

LED

High performance LED CRI: 80. Color temperature ranges from CCT: 2700K - 5000K. Also available in Amber LED array, 560nm + (AMBR).

Optics

Available Optics: Type II (T2), Type III (T3), Type IV (T4), and Type V (T5).

Mounting

Heavy duty steel base (IBP) installs on the ground with heavy duty anchor bolts (four anchor bolts, nuts and washers). External base plate (ESM) also available, consult factory.

Finish

Outdoor polyester powder coat, available in our Zuma standard finishes with a four-step pretreat process to ensure optimal adhesion and surface integrity. All standard finishes are provided in a fine texture with a matte sheen; additional textures and sheens are available upon request. Also available in custom RAL and in marine grade finish (MGF), specify.

Controls

- Dimming. 0-10v dimming (D) available.
- Photocell: Small button style photocell available in 120v-277v on side of fixture (PC).
- Motion Sensor (M)

Options

- Bollard can be made to "Buy American Compliant" (BAA)[1] and "Build America, Buy America Act Compliant" (BABA)[1] (includes BAA)
- Emergency Battery Backup (EMB)
- Sky Night Friendly (SKY)
- 180° Houseside Shield on Optics (HSSOP)
- Surge Protection (S): Field installed in the bottom of the bollard.
- Marine grade finish (MGF) available in standard and custom colors, consult factory.
- Vandal Resistance Hardware (VRH): Optional vandal resistant stainless steel hardware installed for added security. [1]

MARINE GRADE FINISH

SKY NIGHT FRIENDLY

BAA / BABA OPTIONAL



Certificates & Warranty

- Designed to comply with UL 8750
- Suitable for Wet Locations
- 5-Year Warranty

Technical

- Operating Temperature: -40°F to 95°F (-40°C to 35°C)

Product specifications and design subject to change, at any time, without notice.

Please consult Zuma Lighting for the most current information.

Zuma Lighting LLC | 3850 S. Santa Fe Ave. Los Angeles, CA 90058 | www.zumalighting.com | (310) 975-3126

ZUMALIGHTING

Project _____ Type _____ Qty _____

Company _____ Part # _____

Tacoma Bollard

Example Code: TAC-B-0630-10W-U-27K-T2-IBP-BZ8-D-BAA

Item	Size	Wattage	Volts	Color Temp	Optics	Mounting	Finish	Controls	Options
TAC-B Tacoma Bollard	**0630** 6" Sq. x 30" H	**10W**	**U** 120-277v	**27K** 2700K	**T2** Type II	**IBP** Internal Baseplate (Std.)	**BZ8** Zuma Bronze	**D** Dimming 0-10v	**BAA** Buy American Act Compliant
	0636 6" Sq. x 36" H	**12W**	**HV** 347-480v	**3K** 3000K	**T3** Type III	**ESM** External Surface Mount	**BK** GT Black	**PC** Photocell	**BABA** Build America, Buy America Act Compliant
	0642 6" Sq. x 42" H	**15W**		**35K** 3500K	**T4** Type IV		**SL** Iridium Silver	**M** Motion Sensor	**EMB** Emergency Battery Backup
	0648 6" Sq. x 48" H	**20W**		**4K** 4000K	**T5** Type V		**WH** Alpine White		**SKY** Sky Night Friendly
	0830 8" Sq. x 30" H	**30W**		**45K** 4500K			**GR2** Midnight Gray		**HSSOP** 180° Houseside Shield (Optics)
	0836 8" Sq. x 36" H			**5K** 5000K			**GRN** Moss Green		**S** Surge Protection
	0842 8" Sq. x 42" H			**AMBR** 560nm+			**CCxxx**[1] Custom Color		**MGF** Marine Grade Finish
	0848 8" Sq. x 48" H								**VRH** Vandal Resistant Hardware
	CH Custom Size								

1 Custom colors: Available in smooth and textured finishes. Also available in RAL and Sherwin Williams colors, consult factory.

Product specifications and design subject to change, at any time, without notice.

Please consult Zuma Lighting for the most current information.

Zuma Lighting LLC | 3850 S. Santa Fe Ave. Los Angeles, CA 90058 | www.zumalighting.com | (310) 975-3126

ZUMALIGHTING

Project _____ Type _____ Qty _____

Company _____ Part # _____

Tacoma Bollard

Dimensions

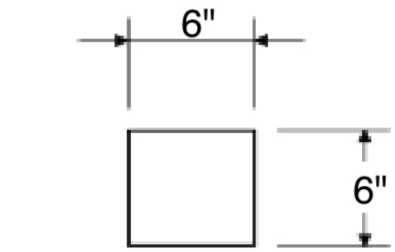

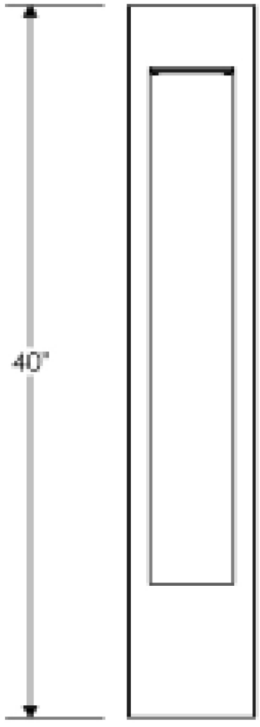

Mounting Template

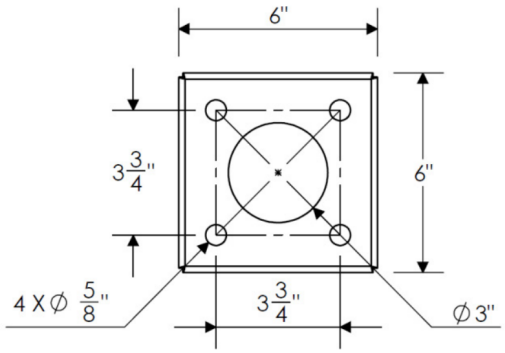

Shown with 6" Sq x 40": H
Other Standard and Cusotm Sizes Available.

Product specifications and design subject to change, at any time, without notice.

Please consult Zuma Lighting for the most current information.

Zuma Lighting LLC | 3850 S. Santa Fe Ave. Los Angeles, CA 90058 | www.zumalighting.com | (310) 975-3126